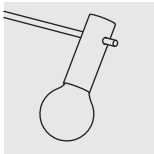

NUDE

LEDS C4

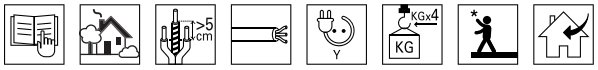

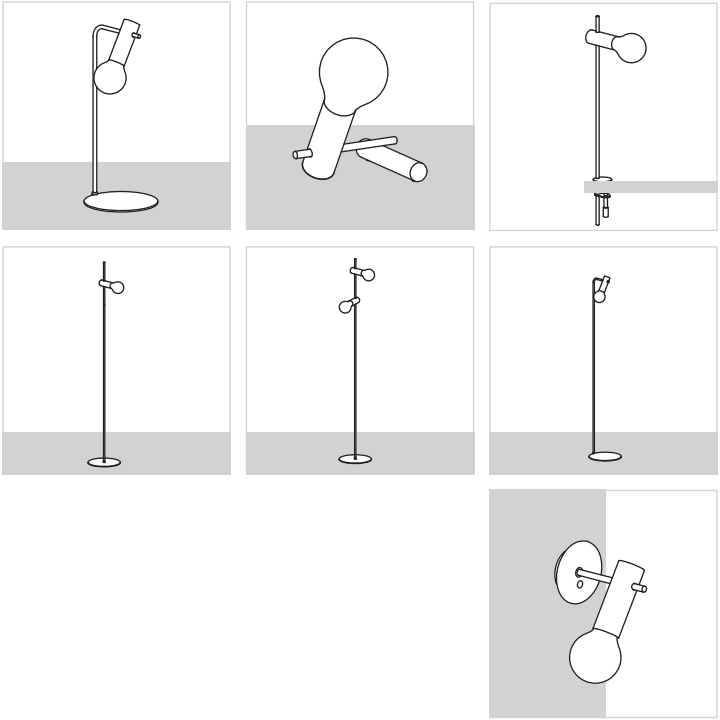

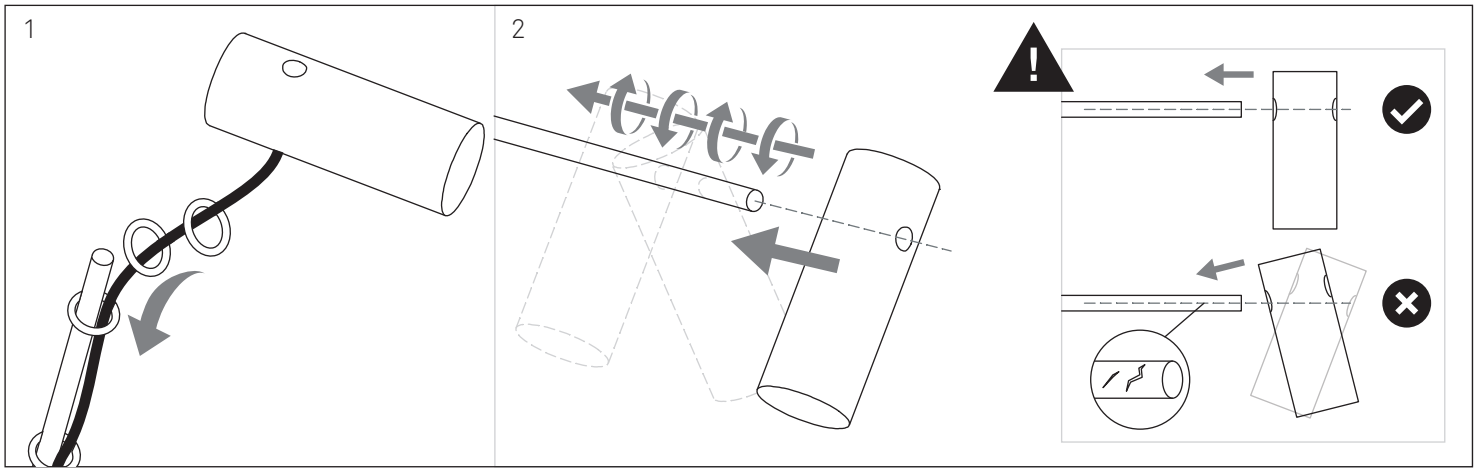

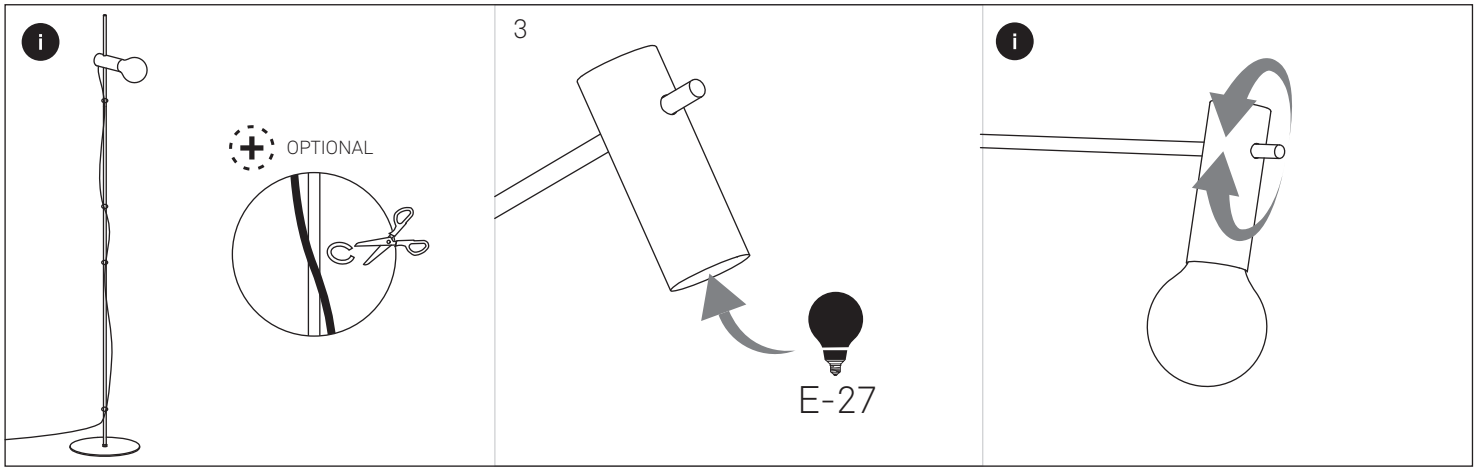

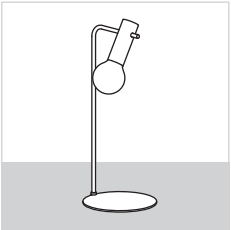
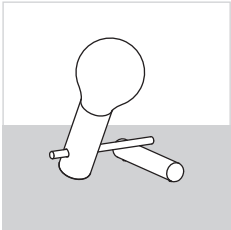
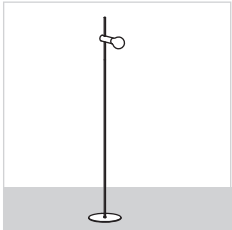
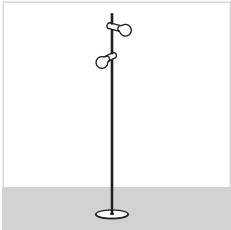
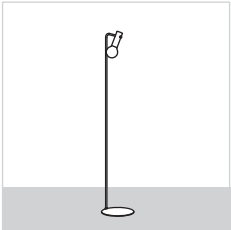

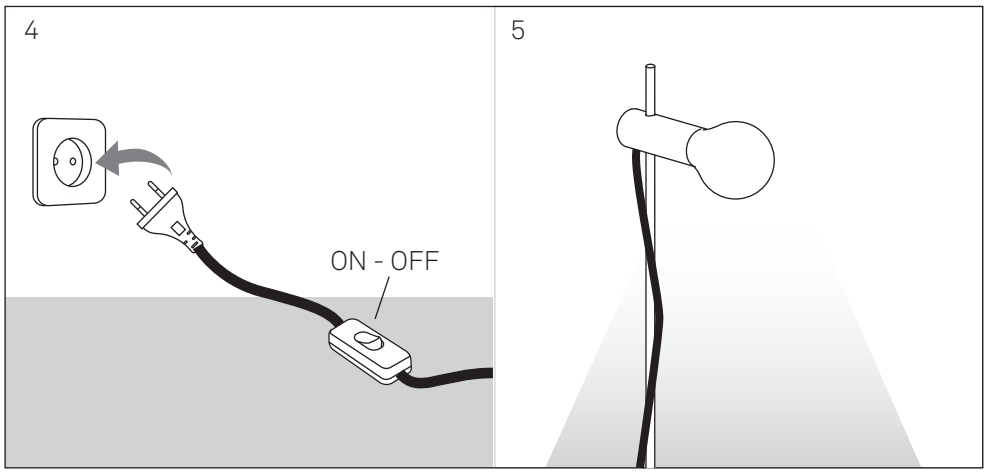
4
ON - OFF
5

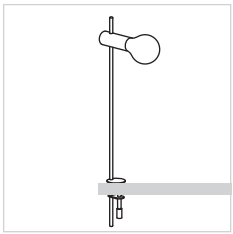
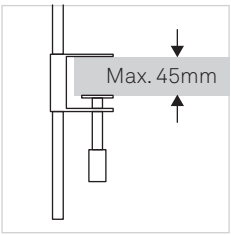
Max. 45mm

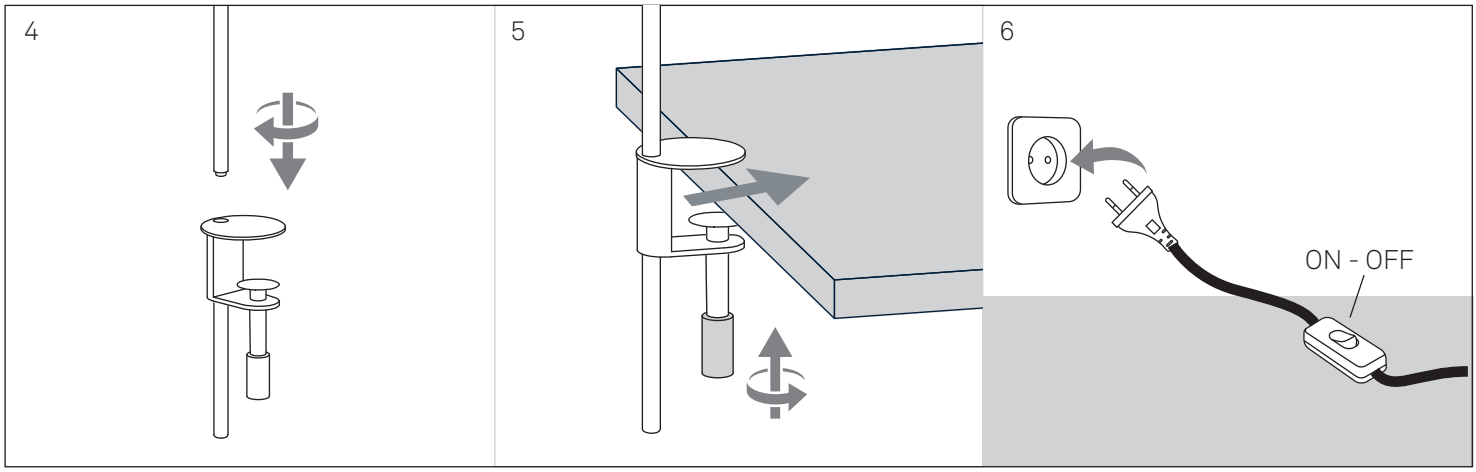
4
5
6
ON - OFF

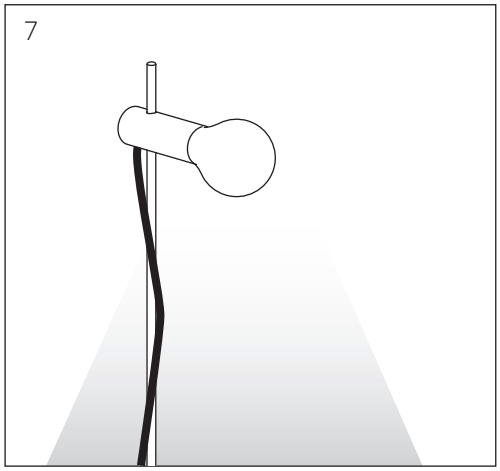
7

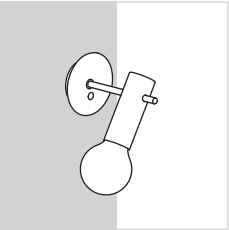

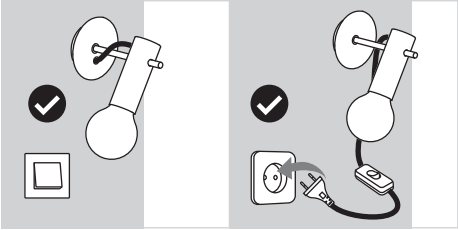

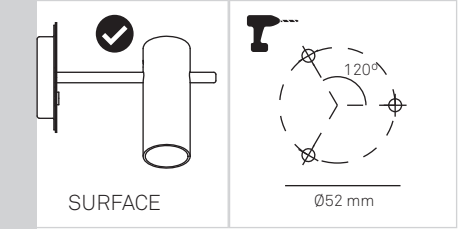
SURFACE
120°
Ø52 mm

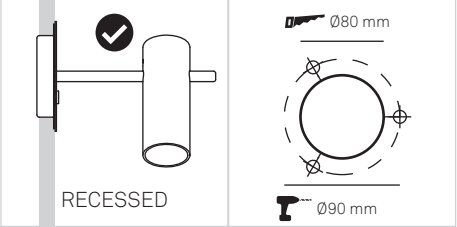
RECESSED
Ø80 mm
Ø90 mm

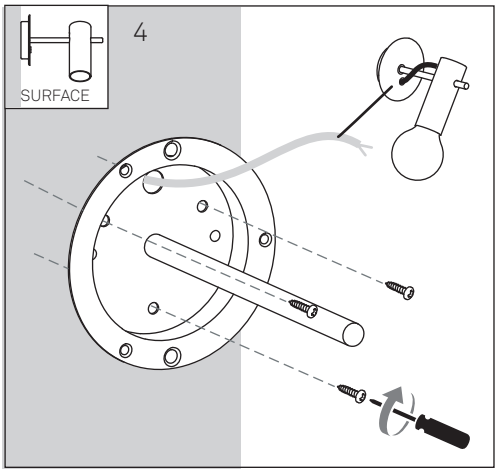
4
SURFACE

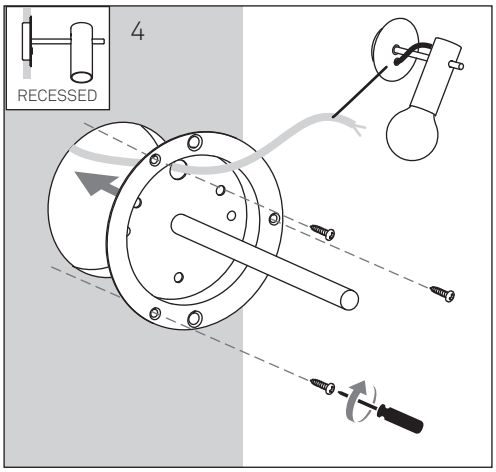
4
RECESSED

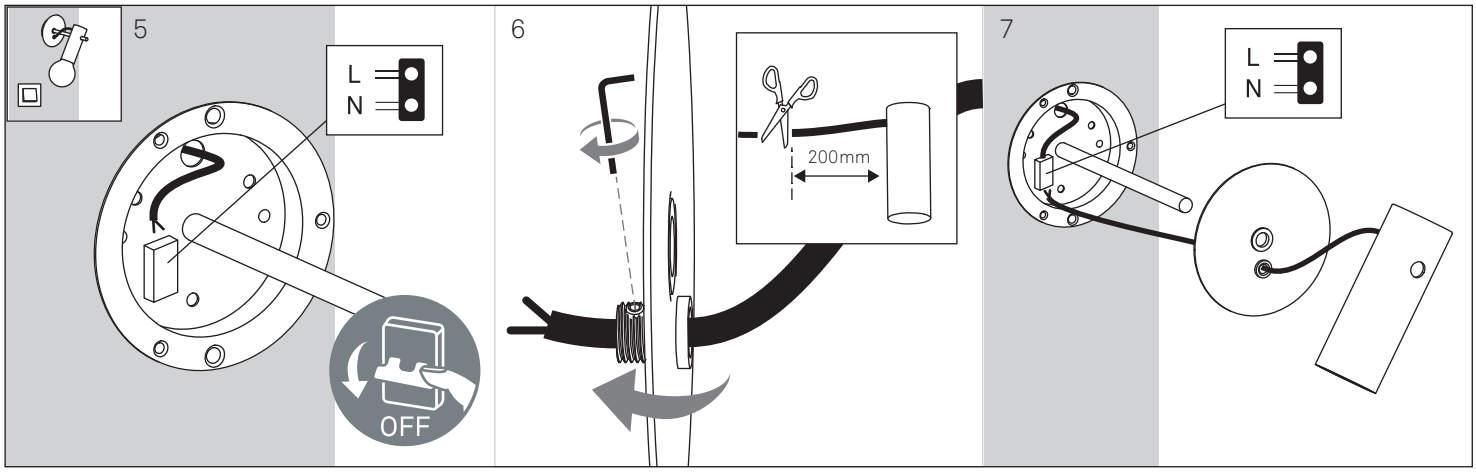
5
L
N
OFF
6
200mm
7
L
N

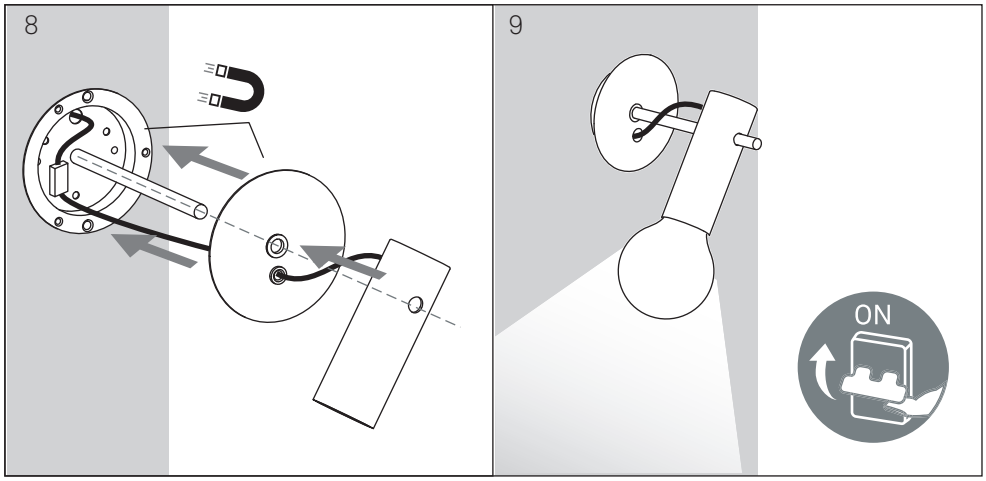
8
9
ON

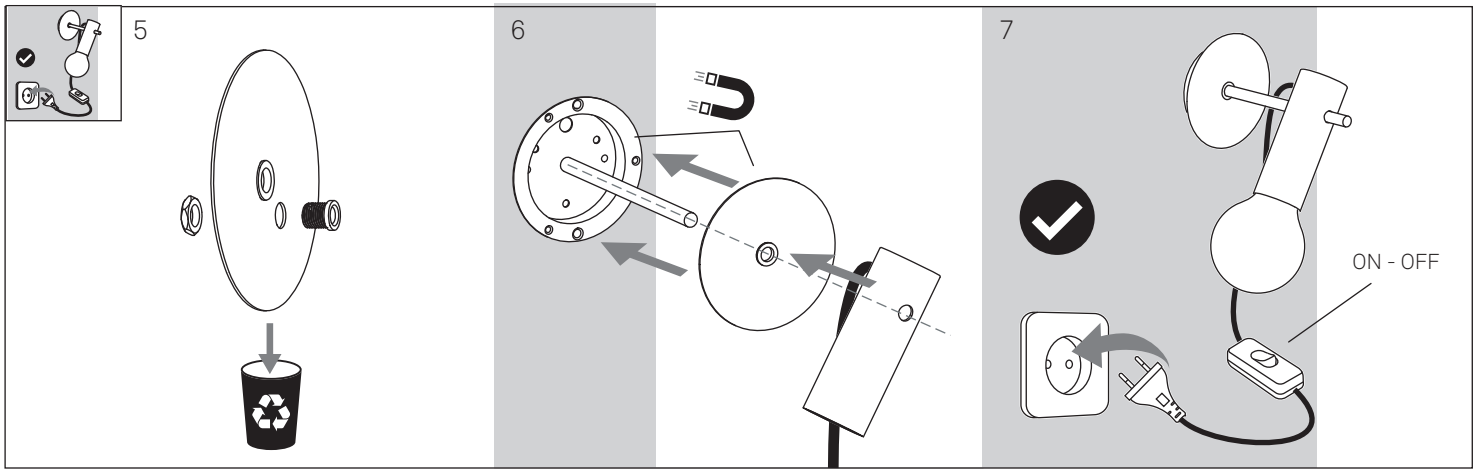
5
6
7
ON - OFF